Catalog Number	71686
UPC Number	60198671686
Description	LED Spot Bullet Flood Light 28W 2724 Lumens White

QPL ID #
PZV2MRX1

Features

- Philips Lumiled LUXEON 3030 2D
- Voltage: 120-277VAC
- Isolated Driver Compartment for Optimal Thermal Management
- Corrosion Resistant Die Cast Aluminum Housing
- Superior Architectural Powder Coat Finish
- Fluted Reflector & Tempered Glass Lens
- Aluminum LED Board - High Conductive
- Waterproof, Aging Resistance, Salt Mist Resistance
- 1/2" NPT Knuckle Mount
- Power Factor: 0.9
- Luminous Efficiency: 106+ Lumens/watt
- Light Pattern: 65° Beam Spread Flood
- Operation Temperature: -40°F to 131°F
- 50,000+ Hour LED Life Expectancy
- IC Current Controlled LED Circuits
- Color Temperature: 3000K Cool White
- DLC (Design Light Consortium)
- cULus Listed
- 5 Year Warranty

General

Lumen Output:	2724
Color Temperature:	3000K Cool White
CRI:	80+
Light Pattern:	65° Beam Spread Flood
Operation Temperature:	-40°F to 131°F
Housing:	ADC12 Aluminum Heat Sink, SUS Back Plate
Housing Color:	White

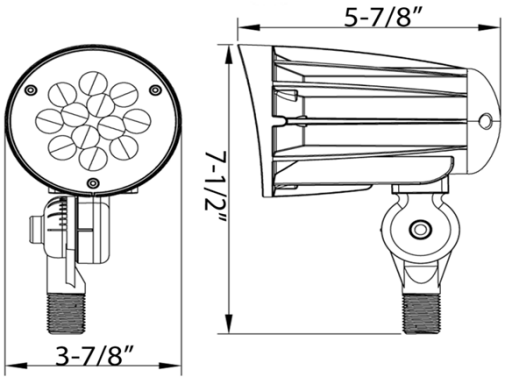

Dimension Information

Height:	7-1/2"
Depth:	5-7/8"
Diameter:	3-7/8"

Specifications

Voltage:	120/208/240/277
Input Current:	.35A
Power Consumption:	28 Watts

Packaging

Box Qty	1
Master Box Qty	8

www.morrisproducts.com
Morris Products 53 Carey Road, Queensbury, NY 12804

Quality Assured

NVLAP LAD CODE 20096Q-0

LM-79-08 Test Report

For

Morris Products Inc.

53 Carey Road
Queensbury, NY 12804

LED FLOOD LIGHT

Model: 71686

Laboratory: Leading Testing Laboratories

NVLAP CODE: 200960-0
No.180S, DongLiu road, BinJiang District, Hangzhou, China
Tel: +86-571-56680806 www.ledtestlab.com

Report No.: HZ16060030j

The laboratory that conducted the testing detailed in this report has been accredited for SSL by NVLAP.

Reviewed by: April Zou

Approved by: Jim Zhang

Engineer: April Zou	Manager: Jim Zhang
Jun. 30, 2016	Jun. 30, 2016

Note: This report does not imply product certification, approval, or endorsement by NVLAP, NIST, or any agency of the Federal Govemment.

Quality Assured

Test Summary

Sample Tested: 71686

Luminous Efficacy (Lumens /Watt)	Total Luminous Flux (Lumens)	Power (Watts)	Power Factor
106.8	2769.8	25.94	0.9852
CCT (K)	CRI	Stabilization Time (Light & Power)	BUG (Back, Up, Glare) Rating
3080	83.3	60	B2-U1-G0

Table 1: Executive Data Summary

Test specifications:	
Date of Receipt	: Jun. 20, 2016
Date of Test	: Jun. 29, 2016
Test item	: Total Luminous Flux, Luminous Distribution Intensity, Luminous Efficacy, Correlated Color Temperature, Color Rendering Index, Chromaticity Coordinate, Electrical parameters
Reference Standard	: IESNA LM-79-2008 Approved Method for the Electrical and Photometric Measurements of Solid-State Lighting Products

TABLE OF CONTENT

LM-79-08 Test Report 1
Test Summary 2
Sample Photos 4
TEST RESULTS 5
Spectral Power Distribution 6
Zonal Lumen Tabulation 7
Luminous Intensity Distribution Plots 9
Luminous Intensity Data 10
EQUIPMENT LIST 11
TEST METHODS 11
Seasoning of SSL Product 11
Goniophotometer Method 11
Photometric and Electrical Measurements 11
Color Characteristics Measurements 12
Color Spatial Uniformity 12

Sample Photos

Figure 1- Overview of the sample

Equipment Under Test (EUT)	
Name	: LED FLOOD LIGHT
Model	: 71686
Electrical Ratings	: 120~277VAC, 50/60Hz
Product Description	: 3000K, Plastic Light Cover Manufacturer of light source: Philips Lumileds Model of light source: LUXEON 3030 2D
Manufacturer	: Morris Products Inc.
Address	: 53 Carey Road Queensbury, NY 12804

TEST RESULTS

Test ambient temperature was 25.1℃.

Base orientation was Light down. Test was conducted without a dimmer in the circuit.

The stabilization time of the sample was 60 minutes, and the total operating time including stabilization was 85 minutes.

The photometric distance is 2.47m.

Luminous data was taken at 0.5°vertical intervals and 10°horizontal intervals.

Parameter	Result	
Test Voltage (V)	120.0	277.0
Voltage frequency (Hz)	60	60
Test Current (A)	0.219	0.104
Power Factor	0.9852	0.9071
Test Power (W)	25.94	26.08
THD A%	14.26	20.98
Luminous Efficacy (lm/W)	106.8	105.5
Total Luminous Flux (lm)	2769.8	2751.5
Color Rendering Index (CRI)	83.3	
R9	11	
Correlated Color Temperature (CCT) (K)	3080	
Chromaticity (Chroma x, Chroma y)	(0.4326, 0.4047)	
Chromaticity (Chroma u, Chroma v)	(0.2475, 0.3473)	
Chromaticity (Chroma u ，Chroma v)	(0.2475, 0.5210)	
Duv	0.0009	
Average Beam Angle (°)	61.9	
Center Beam Candle Power (cd)	2253	
Spacing Criteria	0.89 (0°-180°)/ 0.89 (90°-270°)	
Zonal Lumens in the 0°-60°Zone	94.64%	
Zonal Lumens in the 60°-90°Zone	5.28%	
Zonal Lumens in the 90°-120°Zone	0.02%	
Zonal Lumens in the 120°-180°Zone	0.06%	

Special Color Rendering Indices	
R1	82
R2	92
R3	96
R4	80
R5	82
R6	91
R7	83
R8	61
R9	11
R10	82
R11	79
R12	71
R13	85
R14	98

Table 2: Test data per Goniophotometer Method

Note: According to CIE 1976 (u ,v) diagram, u = u = 4x/(-2x+12y+3), v = 3v/2 = 9y/(-2x+12y+3).

Spectral Power Distribution

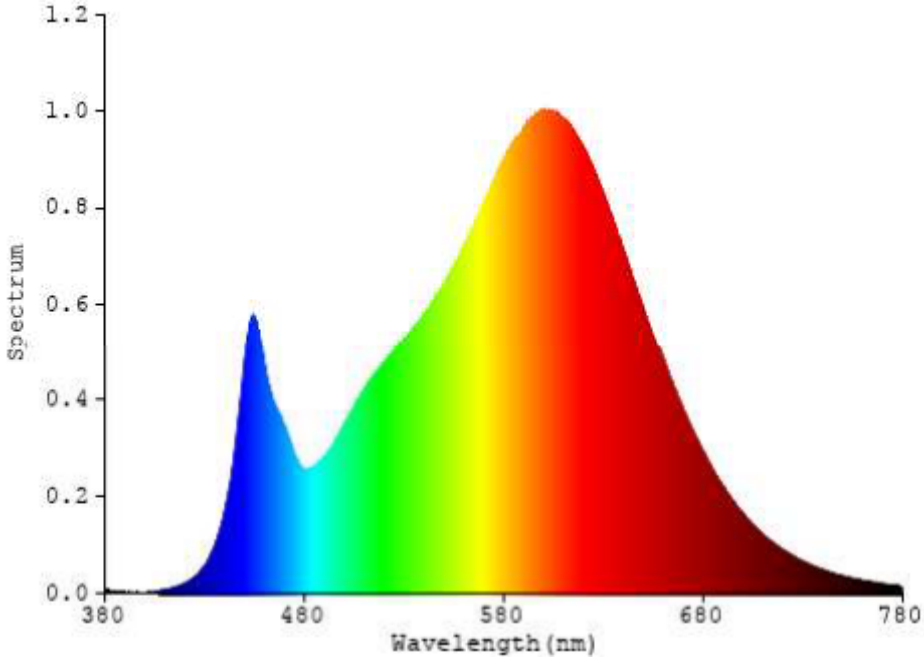

Chart 1: Spectral Power Distribution

Zonal Lumen Tabulation

γ(°)	Lumens	% Total
0- 10	206.035	7.44%
10- 20	528.143	19.07%
20- 30	654.576	23.63%
30- 40	587.125	21.20%
40- 50	414.446	14.96%
50- 60	231.088	8.34%
60- 70	102.216	3.69%
70- 80	36.972	1.33%
80- 90	7.113	0.26%
90-100	0.188	0.01%
100-110	0.111	0.00%
110-120	0.137	0.00%
120-130	0.213	0.01%
130-140	0.334	0.01%
140-150	0.405	0.01%
150-160	0.364	0.01%
160-170	0.248	0.01%
170-180	0.089	0.00%
Total	2769.8	100%

γ(°)	Lumens	% Total
0- 60	2621.413	94.64%
60- 90	146.301	5.28%
0-90	2767.714	99.92%
90- 180	2.089	0.08%
0- 180	2769.8	100%

Table 3: Zonal Lumen Data

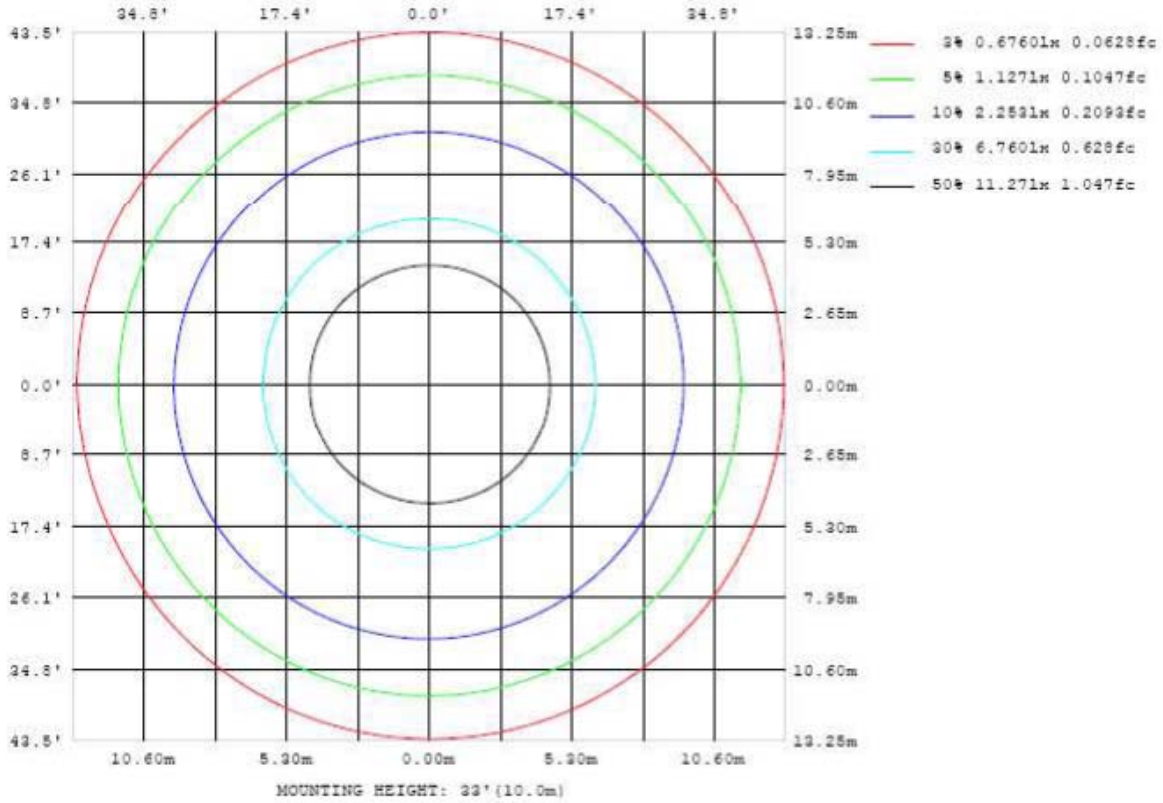

Chart 2: Illuminance Plot (Footcandles)

Luminous Intensity Distribution Plots

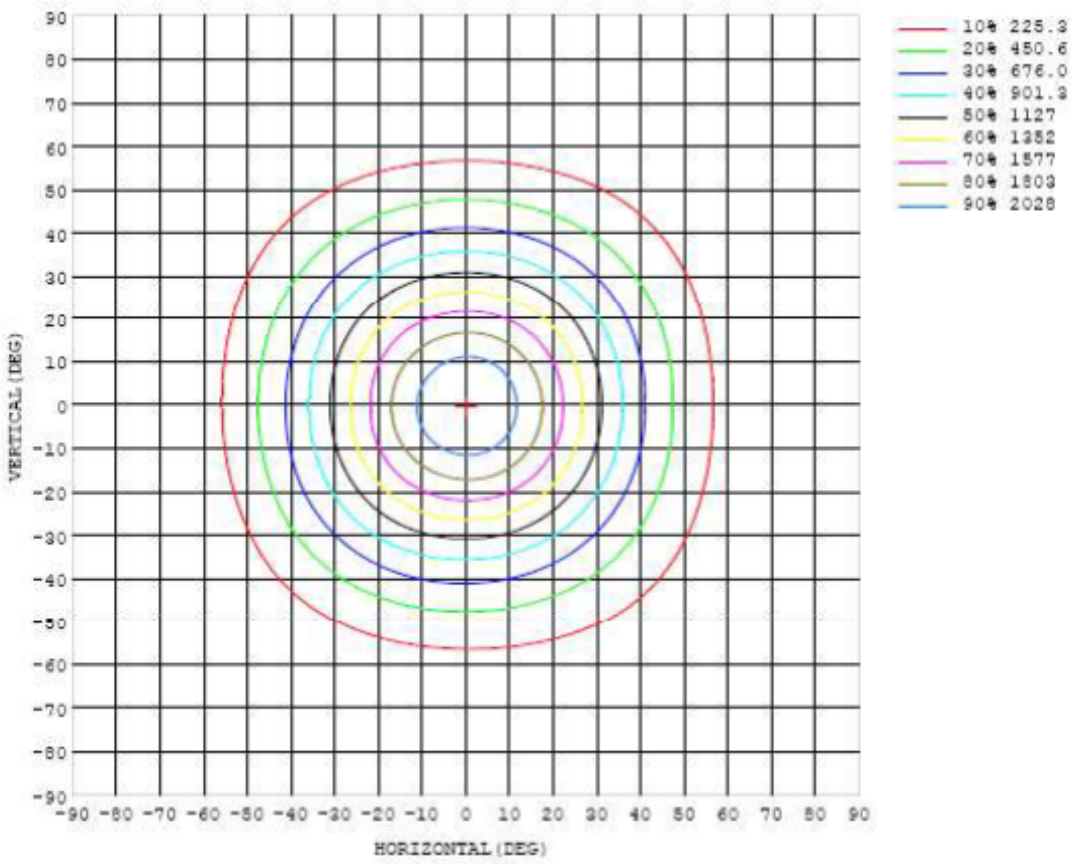

Chart 3: Isocandela Plot

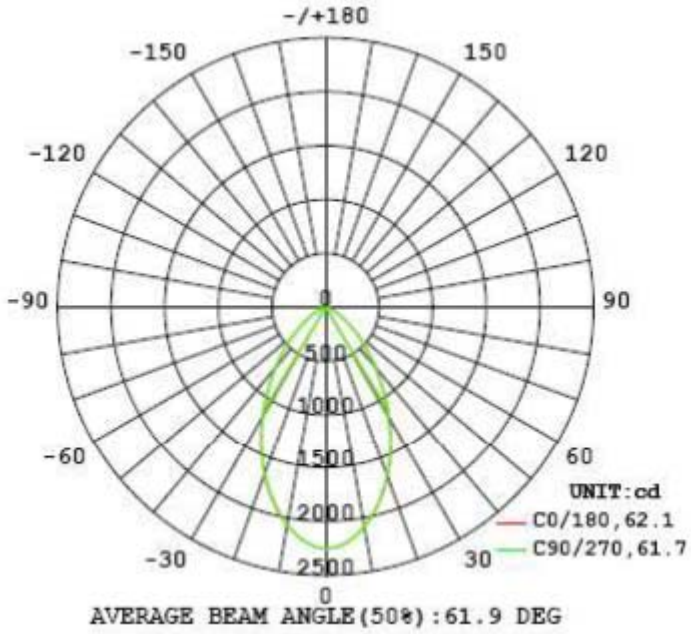

Chart 4: Polar Candela Distribution

Luminous Intensity Data

Table--1 UNIT: cd

γ (DEG) \ C (DEG)	0	22.5	45	67.5	90	112.5	135	157.5	180	202.5	225	247.5	270	292.5	315	337.5
0	2253	2253	2253	2253	2253	2253	2253	2253	2253	2253	2253	2253	2253	2253	2253	2253
5	2207	2210	2211	2209	2208	2204	2202	2200	2197	2196	2195	2196	2199	2202	2202	2205
10	2081	2084	2085	2084	2080	2073	2071	2070	2066	2060	2056	2058	2064	2070	2074	2079
15	1905	1910	1908	1904	1896	1889	1891	1893	1887	1879	1871	1868	1874	1884	1892	1900
20	1686	1694	1694	1684	1673	1672	1675	1677	1669	1667	1661	1653	1655	1665	1674	1681
25	1440	1449	1448	1437	1427	1428	1438	1437	1424	1428	1429	1419	1416	1424	1433	1436
30	1182	1186	1183	1176	1168	1173	1186	1183	1175	1183	1185	1174	1170	1177	1181	1181
35	942	937	933	931	931	940	949	946	942	946	946	941	939	942	944	941
40	719	715	713	714	718	725	730	732	729	725	723	726	727	725	724	723
45	531	529	528	531	536	538	538	538	537	533	530	536	541	536	535	535
50	377	378	379	381	382	381	376	372	376	375	373	380	385	382	380	379
55	257	258	261	260	257	254	247	239	244	249	252	257	260	259	259	258
60	170	172	173	171	168	158	145	138	141	151	159	167	170	170	170	170
65	110	111	111	109	103	92.5	83.4	78.8	79.9	85.0	94.7	103	108	108	109	110
70	71.6	72.3	72.0	68.6	61.6	52.1	43.0	39.7	40.2	46.1	53.2	62.3	67.8	69.0	70.2	71.3
75	46.5	46.7	45.3	40.5	33.4	25.9	18.0	13.7	14.7	19.9	26.1	34.4	41.1	43.4	44.6	45.9
80	28.9	28.2	24.9	20.8	15.8	8.15	1.85	0.00	1.17	3.88	8.34	14.8	21.8	25.0	26.0	27.7
85	14.3	12.9	9.64	6.41	2.76	0.18	0.06	0.14	0.09	0.00	0.54	2.90	6.40	9.80	11.7	13.2
90	2.11	1.61	0.78	0.13	0.00	0.05	0.09	0.12	0.10	0.06	0.03	0.03	0.18	0.50	1.07	1.69
95	0.33	0.21	0.08	0.04	0.05	0.07	0.17	0.20	0.15	0.09	0.04	0.03	0.04	0.12	0.27	0.34
100	0.13	0.11	0.07	0.07	0.07	0.09	0.16	0.21	0.19	0.09	0.05	0.04	0.05	0.07	0.10	0.11
105	0.14	0.14	0.10	0.10	0.10	0.12	0.16	0.22	0.18	0.08	0.06	0.06	0.06	0.05	0.08	0.11
110	0.12	0.13	0.13	0.14	0.14	0.14	0.12	0.00	0.00	0.00	0.00	0.00	0.07	0.07	0.10	0.12
115	0.16	0.16	0.17	0.17	0.18	0.18	0.15	0.11	0.11	0.10	0.10	0.10	0.10	0.09	0.13	0.16
120	0.21	0.21	0.22	0.22	0.22	0.23	0.19	0.14	0.14	0.13	0.13	0.13	0.13	0.12	0.18	0.22
125	0.29	0.28	0.28	0.29	0.29	0.30	0.25	0.18	0.18	0.18	0.18	0.18	0.17	0.16	0.25	0.30
130	0.40	0.39	0.39	0.39	0.39	0.40	0.34	0.23	0.24	0.24	0.24	0.25	0.25	0.23	0.36	0.42
135	0.55	0.54	0.53	0.52	0.52	0.54	0.46	0.32	0.32	0.32	0.32	0.32	0.32	0.31	0.49	0.57
140	0.69	0.69	0.68	0.68	0.68	0.70	0.60	0.40	0.40	0.40	0.40	0.40	0.40	0.38	0.61	0.71
145	0.82	0.82	0.82	0.82	0.83	0.85	0.73	0.48	0.47	0.46	0.45	0.45	0.45	0.43	0.72	0.83
150	0.91	0.92	0.93	0.93	0.94	0.97	0.83	0.52	0.51	0.51	0.51	0.50	0.51	0.49	0.81	0.92
155	0.97	0.99	0.99	1.00	1.01	1.04	0.90	0.56	0.56	0.56	0.56	0.56	0.57	0.55	0.88	0.97
160	1.01	1.01	1.02	1.03	1.04	1.07	0.95	0.60	0.61	0.60	0.60	0.62	0.62	0.60	0.96	1.01
165	1.03	1.03	1.04	1.05	1.06	1.09	1.00	0.64	0.66	0.68	0.69	0.71	0.72	0.70	1.02	1.03
170	1.03	1.04	1.04	1.05	1.05	1.07	1.04	0.76	0.72	0.71	0.71	0.72	0.73	0.73	1.03	1.02
175	1.00	1.00	1.01	1.02	1.02	1.03	1.03	0.92	0.79	0.83	0.86	0.88	0.89	0.95	0.98	0.99
180	0.96	0.96	0.96	0.96	0.96	0.96	0.96	0.96	0.96	0.96	0.96	0.96	0.96	0.96	0.96	0.96

Table 4: Luminous Intensity Data

EQUIPMENT LIST

Test Equipment	Model	Equipment No.	Calibration Date	Calibration Due date
Goniophotometer system	GO-R5000	HZTE011-01	Jul. 17, 2015	Jul. 16, 2016
Digital Power Meter	PF2010A	HZTE028-01	Jul. 17, 2015	Jul. 16, 2016
AC Power Supply	PCR 500L	HZTE001-08	Jul. 17, 2015	Jul. 16, 2016
DC Power Supply	WY12010	HZTE004-03	Jul. 17, 2015	Jul. 16, 2016
Temperature Meter	TES1310	HZTE017-01	Jul. 17, 2015	Jul. 16, 2016
Standard Source	D908	HZTE012-01	Jul. 23, 2015	Jul. 22, 2016
Standard source	SCL-1400	HZTE012-02	Oct. 21, 2015	Oct. 20, 2016

Table 5: Test Equipment List

TEST METHODS

Seasoning of SSL Product

For the purpose of rating new SSL products, SSL products shall be tested with no seasoning.
Therefore, no seasoning was performed.

Goniophotometer Method

Photometric and Electrical Measurements

An EVERFINE Type C Model GO-R5000 Goniophotometer was used to measure the intensity at each angle of distribution for each sample. The photometric distance is 2.475m for near-field measurement or 30m for far-fie71675ld measurement. Bandwidth of spectroradiometer is 380nm-780nm.
Ambient temperature was measured at the same height of the sample mounted on the Goniophotometer equipment. Each SSL unit was operated on the client provided driver at the rated input voltage in its designated orientation.
The stabilization time typically ranges from 30 min (small integrated LED lamps) to 2 or more hours for large SSL luminaires). It can be judged that stability is reached when the variation (maximum minimum) of at least 3 readings of the light output and electrical power over a period of 30 min, taken 15 minutes apart, is less than 0.5 %.
Electrical measurements including voltage, current, and power were measured using the Everfine Digital Power Meter.
Some graphics were created with Photometric Plus software.
The standard reference of the Goniophotometer system is halogen incandescent lamp, the intensity distribution type is omni-directional, and is traceable to the National Institute of Metrology P.R. China.
The uncertainty of goniophotometer system reported in this document is expended uncertainty is 1.94% with a coverage factor k=2.

Color Characteristics Measurements

The color characteristics of SSL products include chromaticity coordinates, correlated color temperature, and color rendering index. These characteristics of SSL products may be spatially non-uniform, and thus, in order that they can be specified accurately, the color quantities shall be measured as values that are spatially average, weighted to intensity, over the angular range where light is intentionally emitted from the SSL product. The color characteristics measurements are using gonio-spectroradiometer.

Color Spatial Uniformity

The characteristics of SSL products may be spatially non-uniform, the chromaticity coordinate shall be measured at two vertical planes (C=0°/180° and C=90°/270°) and at 10° or less intervals for vertical angle until the light output dropped to below 10% of the peak intensity. The averaged weighted chromaticity coordinate was calculated from these points. The data was then analyzed to check for delta color differences of the u', v' chromaticity coordinates. The spatial non-uniformity of chromaticity, Δu'v', is determined as the maximum deviation (distance on the CIE (u', v') diagram) among all measured points from the spatially averaged chromaticity coordinate.
The geometry for the chromaticity measurement using gonio-spectroradiometer is shown as following.

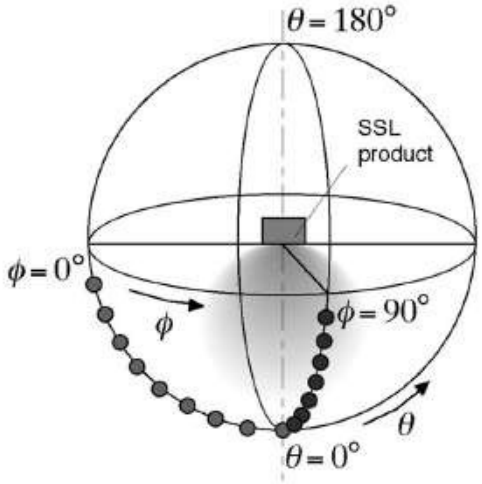

*** End of Report ***

This report is considered invalidated without the Special Seal for Inspection of the LTL. This report shall not be altered, increased or deleted. The results shown in this test report refer only to the sample(s) tested. Without written approval of LTL, this test report shall not be copied except in full and published as advertisement